CROWN

Date: 20/04/2026 rev.00
Model: **CT32072DH**

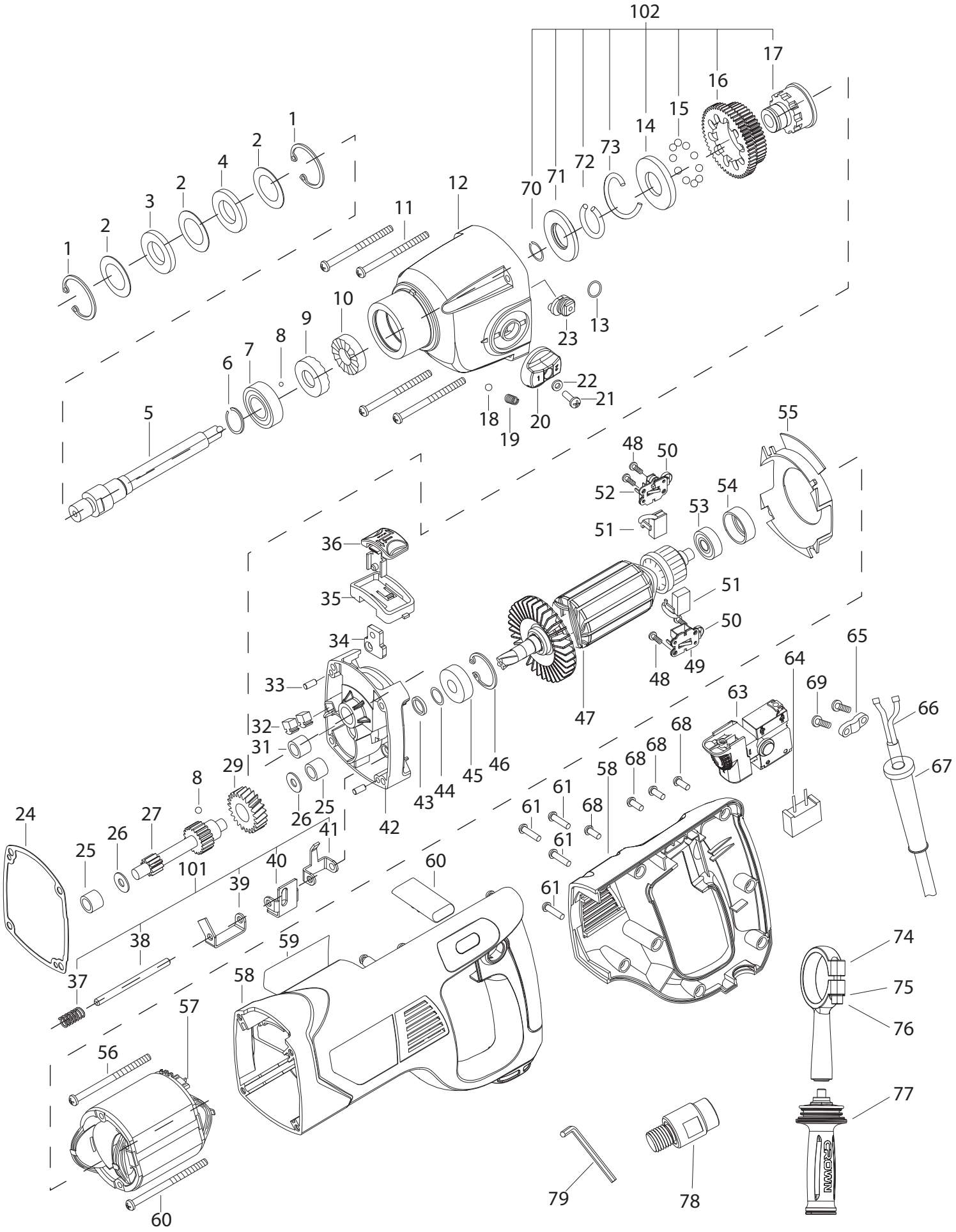

CODE	Pos.No.	Part No.	Description	Qty
CT32072DH	1	34713200101	Circlip For Hole | ø32	2
CT32072DH	2	34856000101	Flat Washer | ø32	3
CT32072DH	3	32400400101	Felt Ring | ø18x32x4	1
CT32072DH	4	32000700101	Rubber Sealing-Ring | ø32x22x3.5	1
CT32072DH	5	33290100101	Spindle	1
CT32072DH	6	35200900101	Spring | ø18.4x9	1
CT32072DH	7	35400501801	Ball Bearing | 6002.2Z	1
CT32072DH	8	34400700101	Steel Ball | ø3	2
CT32072DH	9	33025400201	Upper ratchet wheel	1
CT32072DH	10	33025500201	Lower ratchet wheel	1
CT32072DH	11	34729300601	Tapping Screw | ST4x48C	4
CT32072DH	12	33921800101	Gearbox	1
CT32072DH	13	32000400101	O-Ring | ø12x1.9	1
CT32072DH	14	34823500101	Tripping Washer	1
CT32072DH	15	34401300201	Steel Ball | ø5.5	10
CT32072DH	16	33098500101	Couple gear	1
CT32072DH	17	32865600101	Tripping Body	1
CT32072DH	18	34401200101	Steel Ball | ø4.7	1
CT32072DH	19	35200800101	Spring | ø4.7x10	1
CT32072DH	20	30295400101	2-speed knob	1
CT32072DH	21	34733300601	Screw | M4x12	1
CT32072DH	22	34714300101	Spring Washer | ø4	1
CT32072DH	23	33847700101	Crank lever	1
CT32072DH	24	32428500101	Gasket	1
CT32072DH	25	35401000201	Needle Bearing | HK061009	2
CT32072DH	26	34709100101	Washer | ø6x11x0.5	2
CT32072DH	27	33292900101	Intermediate shaft	1
CT32072DH	29	33112800101	Big Gear	1
CT32072DH	31	35403400401	Needle Bearing | HK091310	1
CT32072DH	32	32415100101	Felt Ring	2
CT32072DH	33	34825700101	Pin | ø4x8	2
CT32072DH	34	32846300101	Impact buffer	1
CT32072DH	35	30337200101	Impact Knob Support	1
CT32072DH	36	30295300101	Impact lever	1
CT32072DH	37	35230900101	Spring | ø18.2x9	1
CT32072DH	38	32854600101	Leader	1
CT32072DH	39	32854300101	Guide bush 1	1
CT32072DH	40	32854400101	Guide bush 2	1
CT32072DH	41	32854500101	Guide bush 3	1
CT32072DH	42	33864700201	Gear box cover	1
CT32072DH	43	32402300101	Sealing-Paperr | ø9x24x0.2	1
CT32072DH	44	32428100101	Ring | ø8.5xø19x2.5	1
CT32072DH	45	35401401101	Ball Bearing | 609.2RS	1
CT32072DH	46	34713000101	Circlip For Hole | ø24	1
CT32072DH	47	23864200101	Armature	1
CT32072DH	48	34719000201	Tapping Screw | ST3x10C	4
CT32072DH	49	33543200101	Brush Holder (R)	1
CT32072DH	50	35236300101	Spring	2
CT32072DH	51	CSP-CB77	Carbon Brush | 5.5x10.5x17.5	2
CT32072DH	52	33543100101	Brush Holder (L)	1
CT32072DH	53	35400201701	Ball Bearing | 608.2Z	1

CODE	Pos.No.	Part No.	Description	Qty
CT32072DH	54	32023600101	Bearing Bush	1
CT32072DH	55	30336900101	Baffle	1
CT32072DH	56	34729700301	Tapping Screw ST | 4x65C	2
CT32072DH	57	23647500101	Stator	1
CT32072DH	58	00090600301	Housing Handle Set	1
CT32072DH	59	42214000102	Rating Label	1
CT32072DH	60	30627900101	F/R lever	1
CT32072DH	61	34728700301	Tapping Screw | ST4x30C	4
CT32072DH	63	36426500101	Switch	1
CT32072DH	64	37403500401	Capacitor | 0.33uF	1
CT32072DH	65	22402600101	Cord Clamp Assy	1
CT32072DH	66	37000707701	Cord	1
CT32072DH	67	32002300101	Cord Sleeve	1
CT32072DH	68	34728100901	Tapping Screw | ST4.2x16F	4
CT32072DH	69	34728000501	Tapping Screw | ST4x16C	2
CT32072DH	70	34715200101	Snap ring	1
CT32072DH	71	32873100101	Press plate	1
CT32072DH	72	35240300201	Spring	1
CT32072DH	73	35240200201	Spring	1
CT32072DH	74	33921900101	Lock link	1
CT32072DH	75	34856200101	Flat Washer | ø8.5xø17x2	1
CT32072DH	76	34766600101	He×.Bolt	1
CT32072DH	77	30227900201	Side Handle	1
CT32072DH	78	32899100101	Connector	1
CT32072DH	79	33515100201	Hex key S6	1
CT32072DH	101	00199305591	Gearshift Assembly	1
CT32072DH	102	00199306341	Safety Clutch Assembly	1